dolphy

Dolphy India / Australia

The sign of quality

DEWS0007

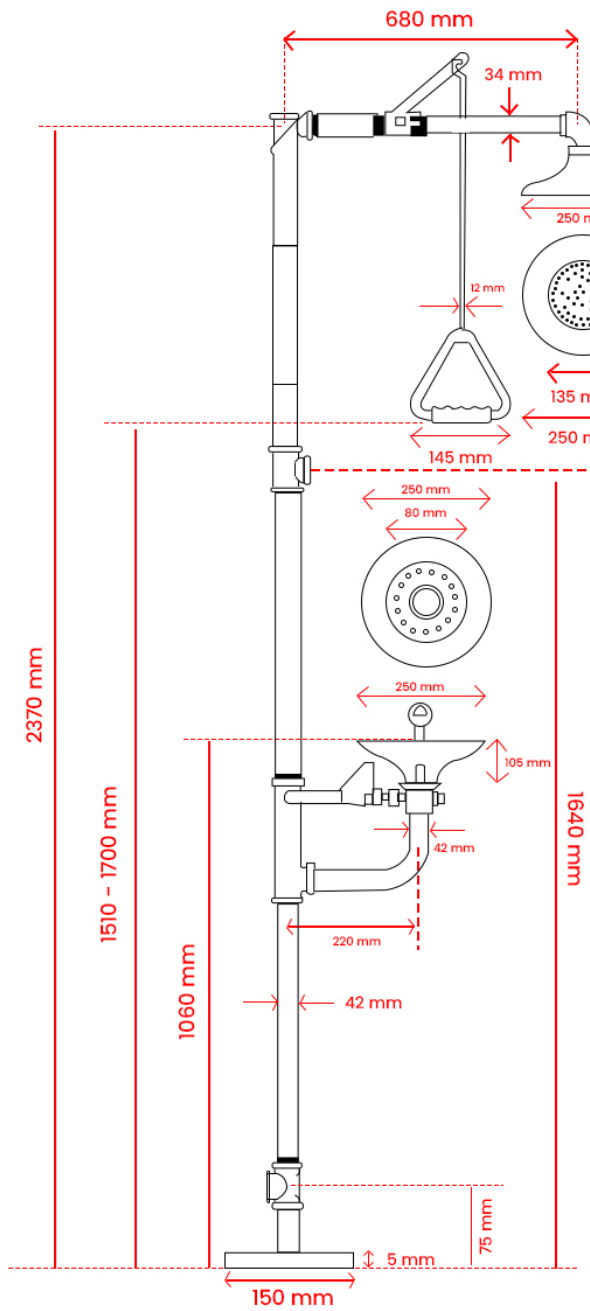

Specifications

KEY FEATURES

Model No	**DEWS0007**
Eye Wash Bowl Material	ABS + Carbon Steel
Mount Type	Floor Mounting
Shower Head Material	ABS
Supply Pipe Material	Carbon Steel
Diameter Of Shower Head	10"
Diameter Of Eye Wash Bowl	10"
Height Of Shower	2150 mm
Flow Rate Shower Head	75.5 L/min
Flow Rate Eye Wash	11.4L/min
Inlet Connection	1 1/2 " IPS
Outlet Connection	1 1/4 " IPS
Category	Eye Wash Station

All dimensions are in mm